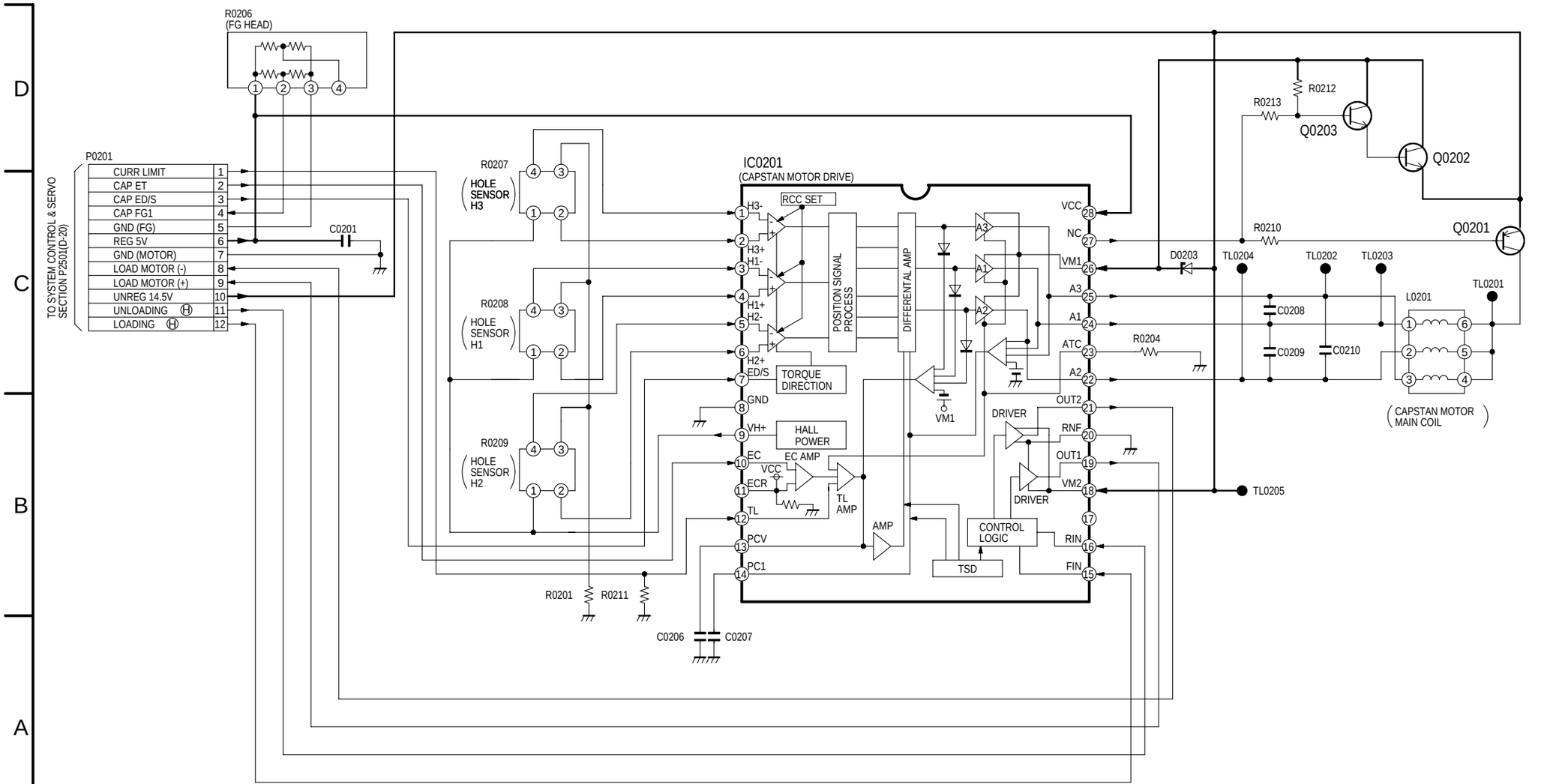

NV-HS870EG/B/EC
CAPSTAN UNIT SCHEMATIC DIAGRAM